Ultrasonic flow measurement for the semiconductor industry

Permanently installed, completely metal-free ultrasonic clamp-on system for the flow measurement of liquids

Features

- Non-invasive flow measurement with high measuring accuracy for stationary use
- The transducer mounting fixture and the transducers are completely metal-free
- For plastic pipes and flexible tubes with diameters of 3/8", 1/2", 3/4", 1", 1 1/4", 1 1/3", 1 1/2" (others on request)
- High measuring accuracy, even at low flow velocities
- Installation and commissioning can be carried out during operation
- No risk of contamination or leaks as the transducers are clamped-on to the outside of the pipe wall
- User-friendly menu navigation - the firmware is specifically adapted to the needs of the semiconductor industry

FLUXUS F501SC

Applications

Flow measurement in the semicondutor industries for:

- Highly corrosive substances, e.g., acids or caustics
- Cleaning agents
- Solvents
- Ultrapure fluids

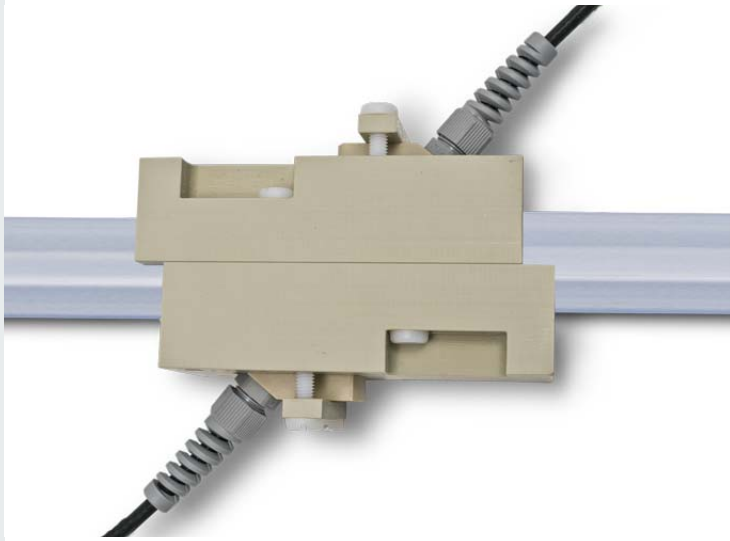

Transducers CDQ2LK1 in block fastener

Transmitter

Technical data

		FLUXUS F501SC
		
design		field device with 1 measuring channel
application		semiconductor applications
measurement		
measurement principle		transit time difference correlation principle
flow velocity	ft/s	0.03 to 82
repeatability		0.25 % of reading ±0.03 ft/s
fluid measurement uncertainty (volumetric flow rate)[1]		water and acoustically similar liquids with < 6 % gaseous or solid content by volume ±1.5 % of reading ±0.03 ft/s
transmitter		
power supply		• 100 to 230 V/50 to 60 Hz or • 20 to 32 V DC or • 11 to 16 V DC
power consumption	W	< 10
number of measuring channels		1
damping	s	0 to 100 (adjustable)
measuring cycle	Hz	10
response time	s	1
housing material		aluminum, powder coated
degree of protection		NEMA 4
dimensions	in	see dimensional drawing
weight	lb	3.3
fixation		wall mounting
ambient temperature	°F	14 to +140
display		2 x 16 characters, dot matrix, backlight
menu language		English, German, French, Dutch, Spanish
measuring functions		
physical quantities		volumetric flow rate, mass flow rate, flow velocity
totalizer		volume, mass
communication interfaces		
service interfaces		• RS232 • USB (with adapter)
process interfaces		max. 1 option: • RS485 (sender) • Modbus RTU, sender (switchable) • BACnet MS/TP, sender (switchable)
accessories		
serial data kit • cable • adapter		 RS232 RS232 - USB
software		• FluxDiagReader: download of measured values and parameters, graphical presentation • FluxDiag (optional): download of measurement data, graphical presentation, report generation
data logger		
loggable values		all physical quantities and totalized values
capacity		> 100 000 measured values
outputs		
		The outputs are galvanically isolated from the transmitter.
• current output		
number		1
range	mA	0/4 to 20
accuracy		0.1 % of reading ±15 µA
active output		R_{ext} < 500 Ω
• binary output		
number		2
optorelay		28 V/100 mA
binary output as alarm output		
• functions		limit, change of flow direction or error
binary output as pulse output		
• functions		mainly for totalizing
• pulse value	units	0.01 to 1000
• pulse width	ms	80 to 1000

[1] for reference conditions and v > 0.82 ft/s, with sensor module

Dimensions

***501**

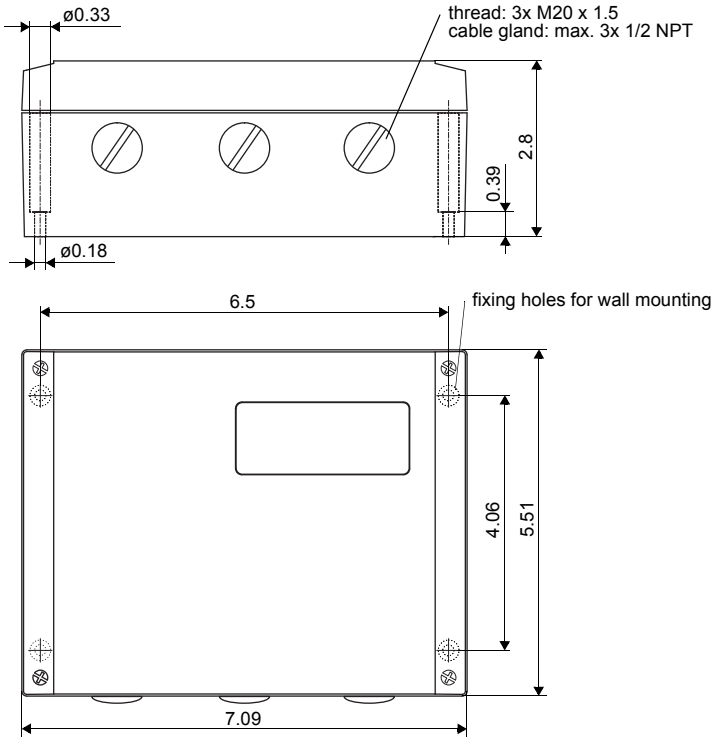

in inch

Terminal assignment

***501**

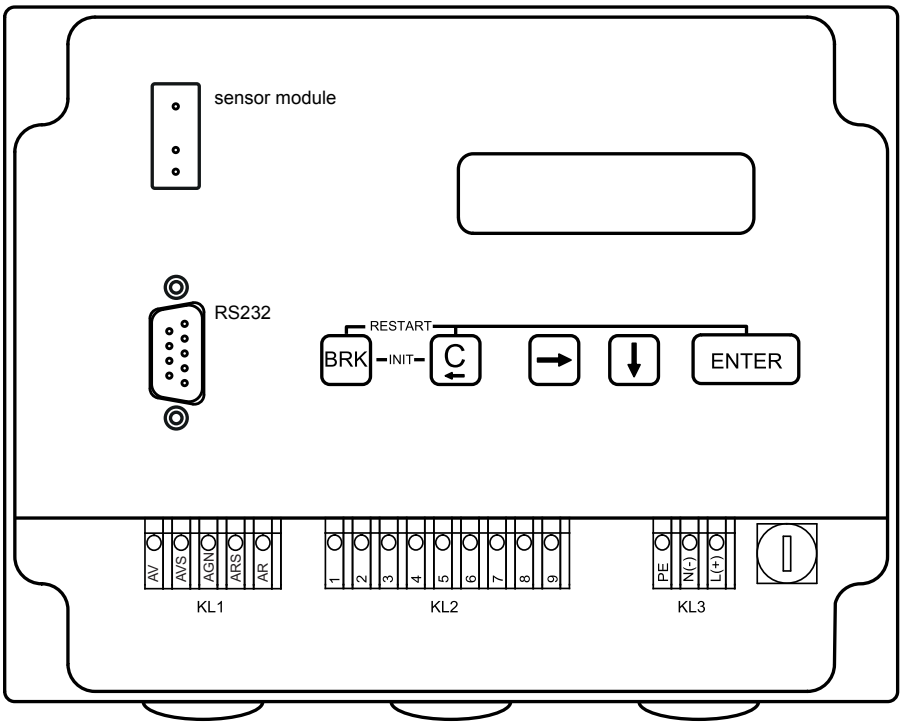

power supply[1]		
terminal	**connection (AC)**	**connection (DC)**
PE	earth	earth
N(-)	neutral	-
L(+)	phase	+

transducers		
terminal	**connection**	**transducer**
AV	signal	↑
AVS	internal shield	
ARS	internal shield	≺
AR	signal	
cable gland	external shield	↑ ≺

outputs[1]					
terminal	**connection**		**terminal**	**connection**	**communication interface**
1(-), 2(+)	binary output B1		8(+)	signal +	• RS485 • Modbus RTU • BACnet MS/TP
3(-), 4(+)	binary output B2		7(-)	signal -	
5(-), 6(+)	current output I1		9	shield	

[1] cable (by customer): e.g., flexible leads, with insulated wire end ferrules, lead cross sectional area: AWG14 to 24

Transducers

Technical data

technical type		CDQ2LK1
transducer frequency	MHz	4
inner pipe diameter d		
min. extended	in	0.31
min. recommended	in	0.47
max. recommended	in	2
pipe wall thickness		
min.	in	0.02
material		PEEK
degree of protection		NEMA 6
transducer cable		
type		2549
length	ft	32
dimensions		
length l	in	1.57
width b	in	0.71
height h	in	1.04
dimensional drawing		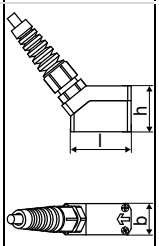
pipe surface temperature		
min.	°F	-4
max.	°F	+212
ambient temperature		
min.	°F	-4
max.	°F	+212

Transducer mounting fixture

block fastener

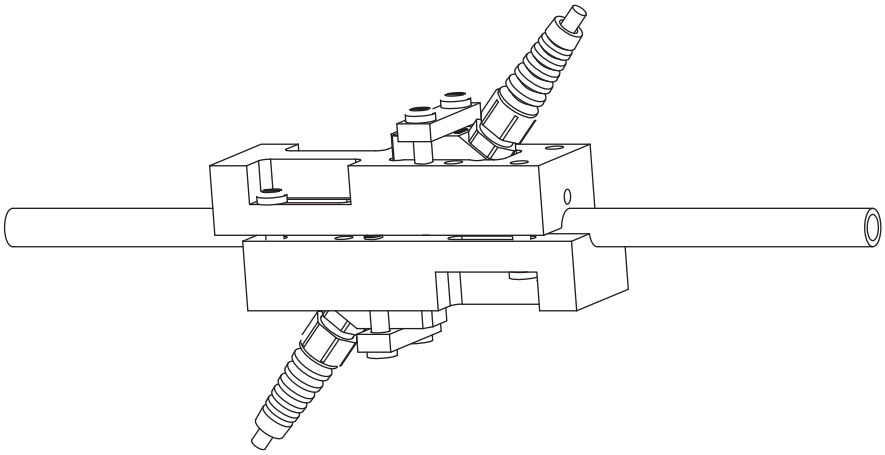

material: PP

outer pipe diameter:
3/8", 1/2", 3/4", 1", 1 1/4", 1 1/3", 1 1/2"
(others on request)

dimensions l x b x h:

- l: 4.72 in
- b:
  3/8", 3/4", 1": 1.81 in
  1/2": 1.61 in
  1 1/4": 2.09 in
  1 1/3", 1 1/2": 2.4 in
- h: outer pipe diameter +
  2x transducer height + 0.87 in

Coupling materials for transducers

type	**ambient temperature** °F
coupling pad type VT	14 to +392

Connection systems

direct connection

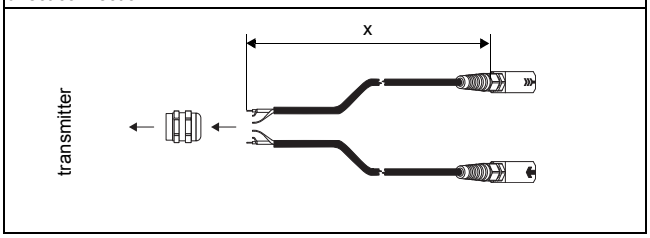

x = transducer cable length

Cable

transducer cable		
type		**2549**
weight	lb/ft	0.04
ambient temperature	°F	-148...+392
cable jacket		
material		PTFE
outer diameter	in	0.21
thickness	in	0.02
color		black
shield		x

FLEXIM AMERICAS Corporation
Edgewood, NY 11717
USA

Tel.:(631) 492-2300
Fax:(631) 492-2117

internet: www.flexim.com
e-mail: usinfo@flexim.com

1-888-852-7473

2019-07-01, TSFLUXUS_F501SCV2-3US_Lus